

evCHARGEsolutions®com

North America's Leading EV Charging Equipment Distributor

INSTALLATION MANUAL

EV CHARGE SOLUTIONS® EZ-PULL PEDESTAL

evCHARGEsolutions.com

INDEX

Supplied Parts & Components....3
Introduction....4
Safety Notes & Warnings....5
Concrete Pad, Power Feed, and Anchor Requirements....6
Single & Dual Pedestal and Base Plate Dimensions....7
Installation....8
- Pedestal Base Plate Installation....8
- Installing Cable Retractor to Pedestal....9
- Installing the Cable Clamp to Charging Cable....9

FIGURES

Figure 1.1 ADA Guidelines.... 4
Figure 2.1 Safety Notes & Warnings.... 5
Figure 3.1 Single Configuration, 3" x 6" x 32" Pedestal (Front & Side).... 7
Figure 3.2 Dual Configuration, 3" x 6" x 32" Pedestal (Front & Side).... 7
Figure 3.3 3" x 6" x 48" Pedestal Base Plate Dimensions.... 7
Figure 3.4 Drill Mounting Holes.... 7
Figure 3.5 Tap in Drop-In Anchors.... 7
Figure 3.6 Route Power Feed & Communication Wires Through Pedestal.... 7
Figure 4.1 Remove Conduit Hole Plugs for Above Ground Power Feed.... 8
Figure 4.2 Bolt-Down Pedestal Base.... 8
Figure 4.3 Install 90-Degree Conduit NM Connectors.... 8
Figure 4.4 Attach Retractor Base to Pededstal Base Plate.... 8
Figure 4.5 Attaching Cable Retractor to Pedestal.... 8
Figure 4.6 Secure the Single or Dual Mounting Bracket.... 9
Figure 5.1 Mount the EVSE Bracket to Mounting Bracket.... 9
Figure 5.2 Attach Retractor Base to Pedestal Base Plate.... 9
Figure 5.3 Attaching Cable Retractor to Pedestal.... 9
Figure 5.4 Single Mounting Configuration.... 9
Figure 6.1 Dual Mounting Configuration.... 10
Figure 6.2 Cable Unwound.... 10
Figure 6.3 Charging Cable Midway Point.... 10
Figure 6.4 Cable Hovers Above Ground.... 10
Figure 7.1 Attaching the Cable Clamp.... 11

SUPPLIED PARTS & COMPONENTS

** Electric Vehicle Charging Station Sold Separately*

QUANTITY	SUPPLIED COMPONENT / PART
(1) ONE	Pedestal Base Assembly (*11.5" x 11.5" x 32"*)
(1) ONE	Retractor Assembly (*10.25" x 2.56" x 72"/95"*)
(1) ONE	Single or Dual EVSE Mounting Bracket
(4) FOUR	1/4-20 x 1/2" Machine Button Head Screws with two (2) nuts
(2) TWO	3/4" NM Flex Right-Angle Connector
(3) THREE	3/4" NM Flex Straight Thru Connector
(14) FOURTEEN	10–32 x 1/2" Machine Button Head Screws with nuts
(4) FOUR	Drop-In Anchors
(4) FOUR	Stainless Anchor Bolts with Washers
(4) FOUR	1" Conduit Hole Plugs
(4) FOUR	Conduit Reducing Washers, 1" NPT to 3/4" NPT
(2) TWO	Liquid-tight flex conduit, 3/4" X 12"
(1) ONE	Liquid-tight flex conduit, 3/4" X 6"
(1) ONE	Tube of Silicone with applicator tip
(2) TWO	Rubber Spacers for Cable Clamps

SAFETY NOTES & WARNINGS

INSTALLATION SAFETY

1. Always switch off the external group switch upstream (*Main breaker, RCD, and disconnector*) before performing any installation, disassembly, repair, or replacement of components.

2. Do a voltage check and make sure that the electrical power is disconnected from the system.

3. When the system is in an open or dangerous condition, do not allow unqualified persons to go near it. Instruct and warn people about the potential harmful high voltages.

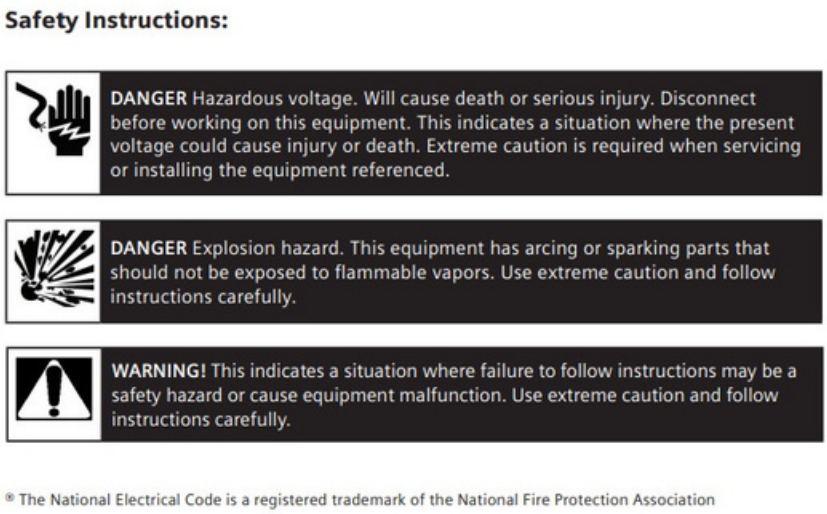

Figure 1.1
Safety Warnings

You may find the following signs on the equipment or this manual.



WARNING
Identifies a hazard that could result in injury due to the presence of rotating or moving parts.



SHARP EDGES
There could be sharp metal edges inside the pedestal or retractor. It is recommended to wear mesh protective gloves when working on the retractor assembly.



WARNING
Identifies a hazard that could result in injuries in which some body parts are pinched or crushed.



WARNING
Identifies a hazard that could result in severe injury or death.



CAUTION
Identifies a hazard that could result in damage to the machine, other equipment, and/or environmental pollution.



TILTING & HANDLING
The retractor system weighs about 70 lbs.
Handling instructions:

1. Consider always two people to unpackage and install.
2. Do not drop the retractor assembly.

CONCRETE PAD, POWER FEED, AND ANCHOR REQUIREMENTS

Provide an approved concrete or composite base with the top flush at ground level with 36” conduit stub-up centered. The base size should be a minimum of 18” x 18” x 18” and can be poured or pre-cast / pre-made.

Installation of protective steel bollard post(s) and/ or curb stops to protect the charger from an automobile strike is recommended. Use the provided drop-in anchors *(with a concrete base)* to secure the pedestal to the base. If using a composite base, such as the *EV Charge Solutions® ‘No-Pour Base’*, secure per manufacturer’s instructions.

There is an option to run the power supply wires underground, feeding through the bottom opening in the pedestal or, if the conduits are run above ground, the wires may be brought in through the sides of the pedestal using the lower 1” holes on each side of the pedestal base. When using above ground conduits, use 3/4” NPT liquid-tight fittings to enter through 1” holes in lower section of the pedestal.

Feed-wire size shall be determined by a qualified electrician using industry standard calculations.

> NOTE: The power feed conduit shall be sized to provide three wires (L1, L2, GND) for each charger being mounted. Install the wires so they extend sufficiently above the ground for direct attachment to the EVSE (the charger). The pedestal is NOT rated to be water-tight, so use of Liquid-tight conduits and fittings is required.

SINGLE CONFIGURATION

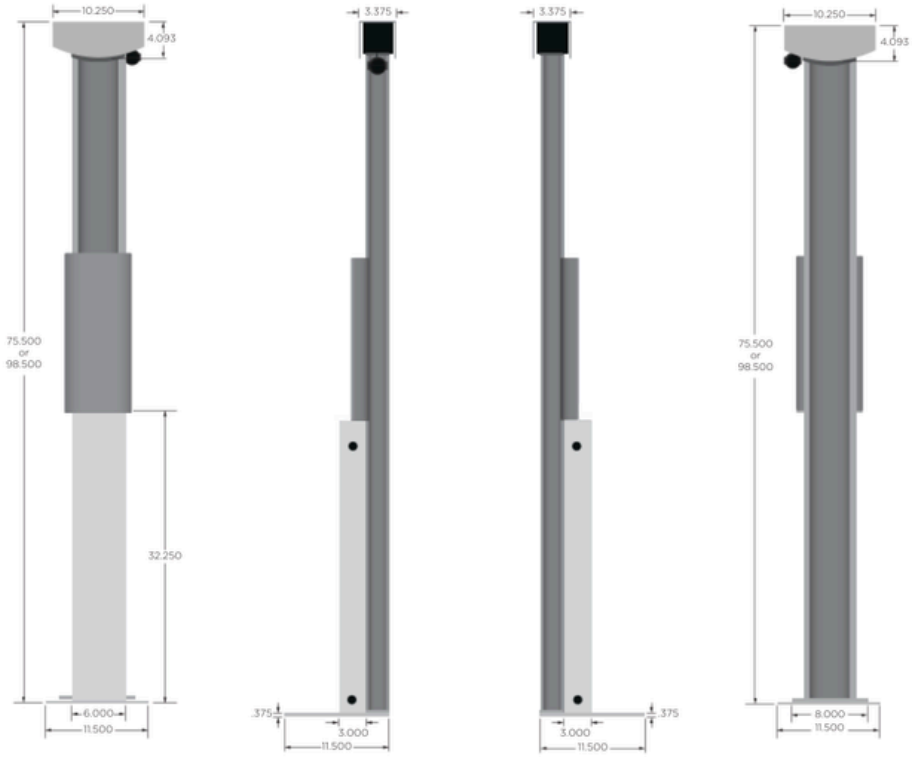

Figure 3.1
Single - Front,RSide,LSide,Back

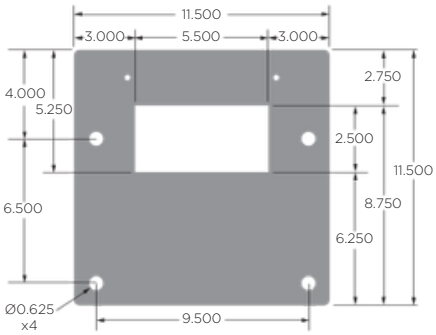

Figure 3.5
3x6x32" Pedestal Base Plate

DUAL CONFIGURATION

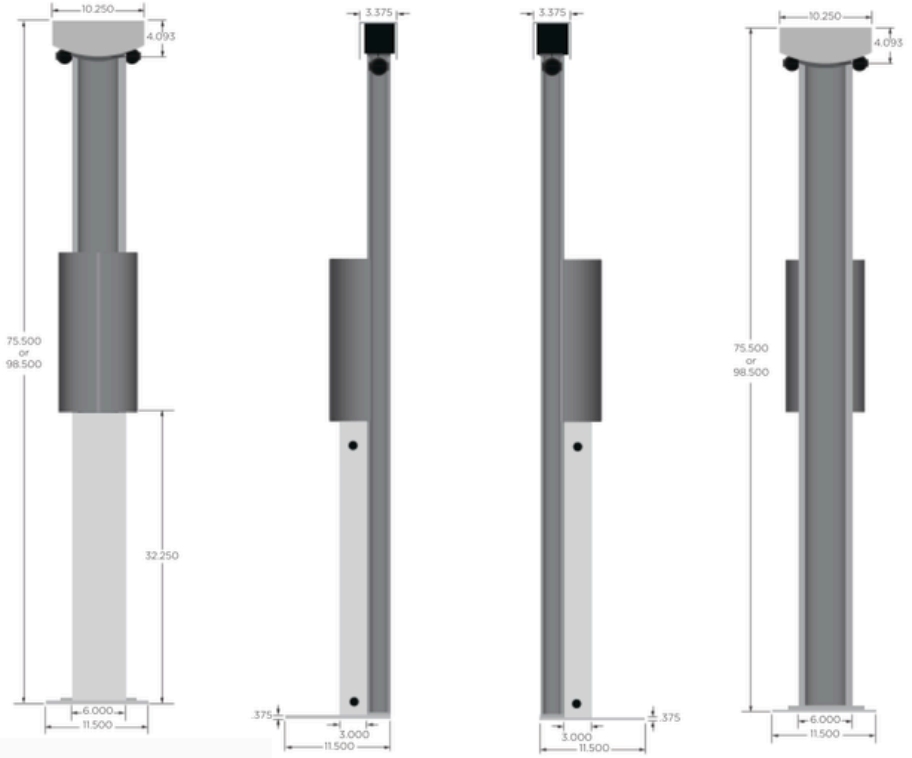

Figure 3.3
Dual - Front, R Side, L Side, Back

INTRODUCTION

Applications include any residential or commercial, public, or private, where Electric Vehicle (EV) charging is required. Indoors or outdoors is acceptable.

These instructions do not imply to cover all details or variations in equipment, or to provide for every possible contingency to be met in connection with installation, operation, or maintenance.

Should further information be desired, or should problems arise which are not covered sufficiently for the purchaser's purposes, the matter should be referred to Customer Service available at (585) 533-4051.

> NOTE: Due to the weight of the pedestal and assembly, more than one person is required to safely install both the single and dual pedestals.
>
> NOTE: This instruction outlines the recommended general procedure for installation by a qualified person, as defined by all local electrical codes and/or the NEC®.
>
> PERMITS: Be aware that many areas require special permits and/or utility approvals to install EV charging equipment. Contact your local electrical inspector's office and your local utility prior to beginning work to understand local requirements.
>
> TOUCH UP PAINT: See link below for replacement paint, if needed for aesthetic restoration throughout the pedestal or retractor's life:
> https://www.lvppaints.com/RAL7035-Color-Plate.html

All pedestals are factory pre-drilled for installing one (1) or two (2) EVSE units (*specify when ordering*).

Installation height is regulated by NEC®, however, this can vary based on local jurisdiction. NEC® 2011 specifies: Outdoor (NEC® Article 625.30B) define installation of an EV Charging Station as 24-48 inches above the grade (*to any reach point*).

Use appropriate tools and hardware to fasten equipment, see details.



Figure 1.1
ADA Guidelines

INSTALLATION

1 Remove assembly from the two (2) packages. Remove the mounting bracket and hardware from its box and set aside.

2 Place the pedestal base onto the concrete (*or composite*) mounting base. *A minimum base size of 18" x 18" x 18" of reinforced concrete is recommended.*

3 Center the base plate over the conduit *(if underground conduit is used)* and mark the four mounting hole locations onto the base. Remove the pedestal assembly.

4 Drill mounting holes in the base. NOTE: The included drop-in anchors require a 5/8" hole.



Figure 4.1
Drill Mounting Holes into Base

5 Clean debris from the holes and install drop-in anchors using the proper setting tool (*not included*).



Figure 4.2
Tap in Drop-In Anchors

6 Place the pedestal base onto the concrete base while completing (a) or (b).

A. If conduit is stubbed up through base from underground routing, feed the power and communication wires through the opening in the base of the pedestal.



Figure 4.3
Feed Power Through Stub-Up

B. If conduit is above ground, remove hole plug(s) and connect conduits to the lower 1" holes in the sides of the pedestal using 3/4" NPT connectors.



Figure 4.4
Feed Power Through Conduit

7 Bolt-down the pedestal base using the included drop-in anchors, ensuring the base is level. Shim base plate if necessary (*shims not included*).



Figure 4.5
Bolt Down Pedestal

8 Install the 90-degree conduit NM connectors on the pedestal (*one for single EVSE and two for dual EVSE*). Feed the power wires (*L1, L2, and GND*) through the NM connectors.



Figure 4.6
Install 90-Degree Conduit NM Connectors

INSTALLATION *(Continued)*

9 Attach the retractor assembly to the pedestal base plate by inserting 1/4-20 machine buttonhead screws into the threaded base plate.



Figure 5.1
Secure Retractor Baseplate to Pedestal Baseplate

10 Attach the upper portion of the pedestal by threading screw through retractor, through nylon spacers, and then through the pedestal. Secure with (2) nuts.
Do not over-tighten.

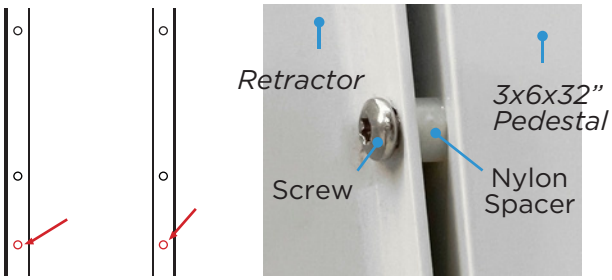

Figure 5.2
Mounting Upper Portion of Retractor to 3x6x32" Pedestal

11 Secure the *(single or dual)* mounting bracket onto the retractor post using four (4) 10 – 32 x 1/2" screws.



Figure 5.3
Secure the Single/Dual Mounting Bracket to Retractor

12 Install your EVSE charging station to the mounting bracket by marking the mounting holes, use the self-tapping screws to secure the EVSE charging station bracket *(if applicable)* to the mounting bracket. Repeat on other side for dual configuration.



Figure 5.4
Secure the EVSE Brackets to Mounting Bracket

13 *Verify Power is NOT Present at the feed wires!*
Attach the power wires *(L1, L2, and GND)* as per EVSE charging station manual. Use the included Liquid-Tight conduit and fittings between the conduit stub-up and charger(s).

14 Once the wires are connected, reassemble the chargers per the EVSE charging station manual. Be sure to use a proper wire length to allow the charger cover to reattach without pinching or obstructing.

15 Use the supplied plugs to plug all un-used holes.

16 Refer to your EVSE User / Operation / Installation Manual for steps to safely power on your charging station(s).

INSTALLATION *(Continued)*

SECTION C

Installing the cable clamp to the charging cable

C-1 Ensurethecharging station is properly installed to the raceway/retractor system.

C-2 Removethebottom half of the cable clampbyremoving the two screws and set aside.

C-3 Unravel the charging cable by removing any twists and holster the charging station connector to the connector dock. **See Figure 7.1 Cable Unwound.**

C-3 Find the approximate mid-way point of the charging cable. Without tightening the screws all the way, loosely attach the cable clamp to the charging cable and retract to starting point. The cable should freely slide/move within the clamp. **See Figure 7.2 Charging Cable Midway Point.**

C-4 Slide the cable positioning until you've achieved a loop from charging station to clamp:

• Both loops should hover above the ground.
See Figure 7.3 Cable Hovers Above Ground.

C-5 If necessary, insert the included rubber spacers between the cable clamps and cables, creating a tight grip on the cable as you tighten the screws *(electrical tape can also be used)*. The cable should not move within the clamp.

C-5 For Dual Cable Retractor Systems, repeat steps C-1 thru C-5 on opposite side of the post.

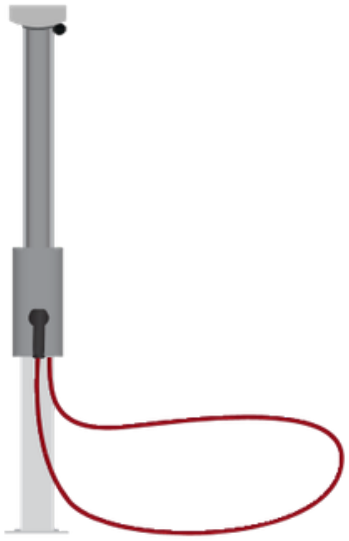

Figure 7.1
Cable Unwound

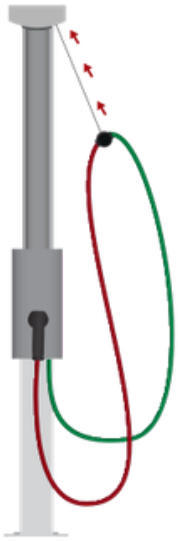

Figure 7.2
Charging Cable Midway Point

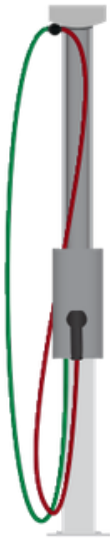

Figure 7.3
Cable Hovers Above Ground



Figure 7.4
Attaching the Cable Clamp



North America's Leading EV Charging Equipment Distributor

500 Canal View Blvd, Suite 100
Rochester, NY 14623
585•533•4051

evCHARGEsolutions.com

Sales@evCHARGEsolutions.com